CP6301-0001-0010-D100/D106-M261
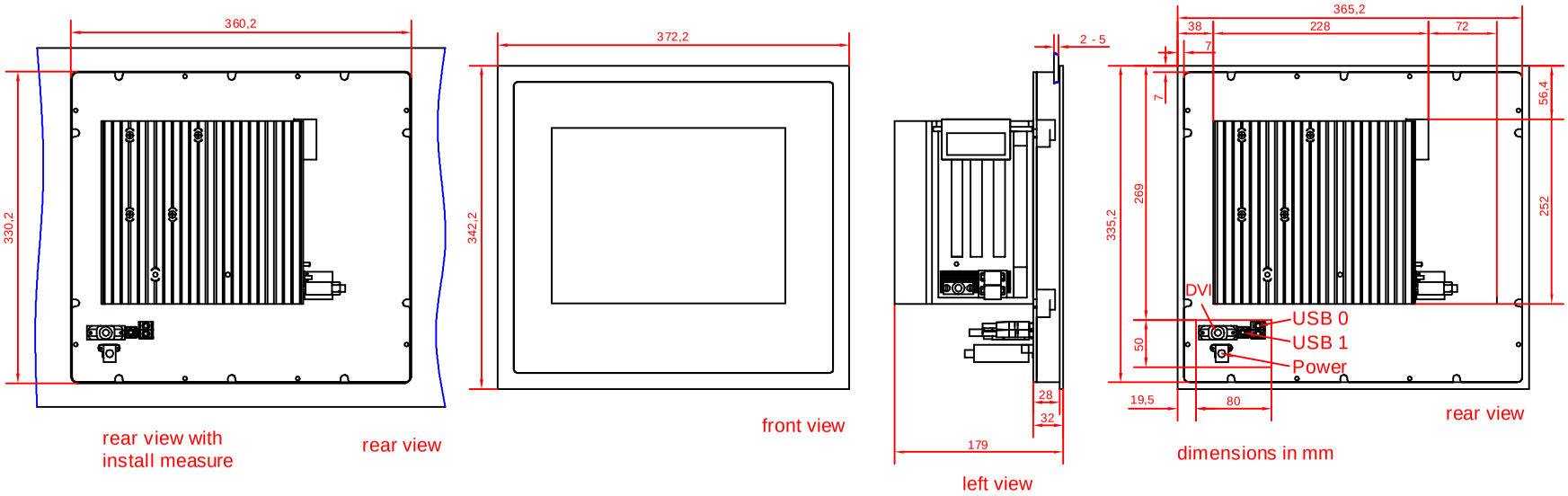
main dimensions