BECKHOFF New Automation Technology

EtherCAT P – ultra-fast communication and power in one cable

One Cable Automation for the field level

EtherCAT P

EtherCAT P: ultra-fast communication and power in one cable

EtherCAT P
- 100 % EtherCAT-compatible
- 100 Mbit/s full duplex
- processing on the fly
- high-precision synchronization with distributed clocks
- cascadable in all topologies (star, line, tree)

Dual power supply
- U_S (system and sensor supply) = 24 V DC/3 A
- U_P (peripheral voltage for actuators) = 24 V DC/3 A

Cost-reduction potential
- elimination of separate supply cables
- reduced material and assembly costs
- minimized installation space for drag-chains, control cabinets and machine footprint
- lowered connection costs with outstanding EtherCAT performance

Connectors and cables
- industrial Cat.5 cables in AWG22 and AWG24
- ultra-thin cables for short distances
- M8 P-coded according to IEC 61076-2-114
- easy assembly in the field

2-cable connection: EtherCAT and Power

One cable connection: EtherCAT P

EtherCAT P: the sensor, actuator and measurement bus

With EtherCAT P, Beckhoff combines communication and power in a single 4-wire standard Ethernet cable. The 24 V DC supply of the EtherCAT P slaves and of the connected sensors and actuators is integrated: U_S (system and sensor supply) and U_P (peripheral voltage for actuators) are electrically isolated from each other and can each supply a current of up to 3 A to the connected components. At the same time, all the benefits of EtherCAT, such as freedom in topology design, high speed, optimum bandwidth utilization, telegram processing on-the-fly, highly precise synchronization, extensive diagnostics functionality, etc., are all retained.

The currents of U_S and U_P are coupled directly into the wires of the 100 Mbit/s line, enabling the realization of a highly cost-effective and compact connection. EtherCAT P offers benefits both for connecting smaller, remote I/O stations in the terminal box and for decentralized I/O components locally in the process. A connector family was specially developed for EtherCAT P, in order to prevent potential damage caused by incorrect connection with standard EtherCAT slaves. It covers all applications from the 24 V I/O level up to drives with 630 V AC or 850 V DC and a current of up to 72 A.

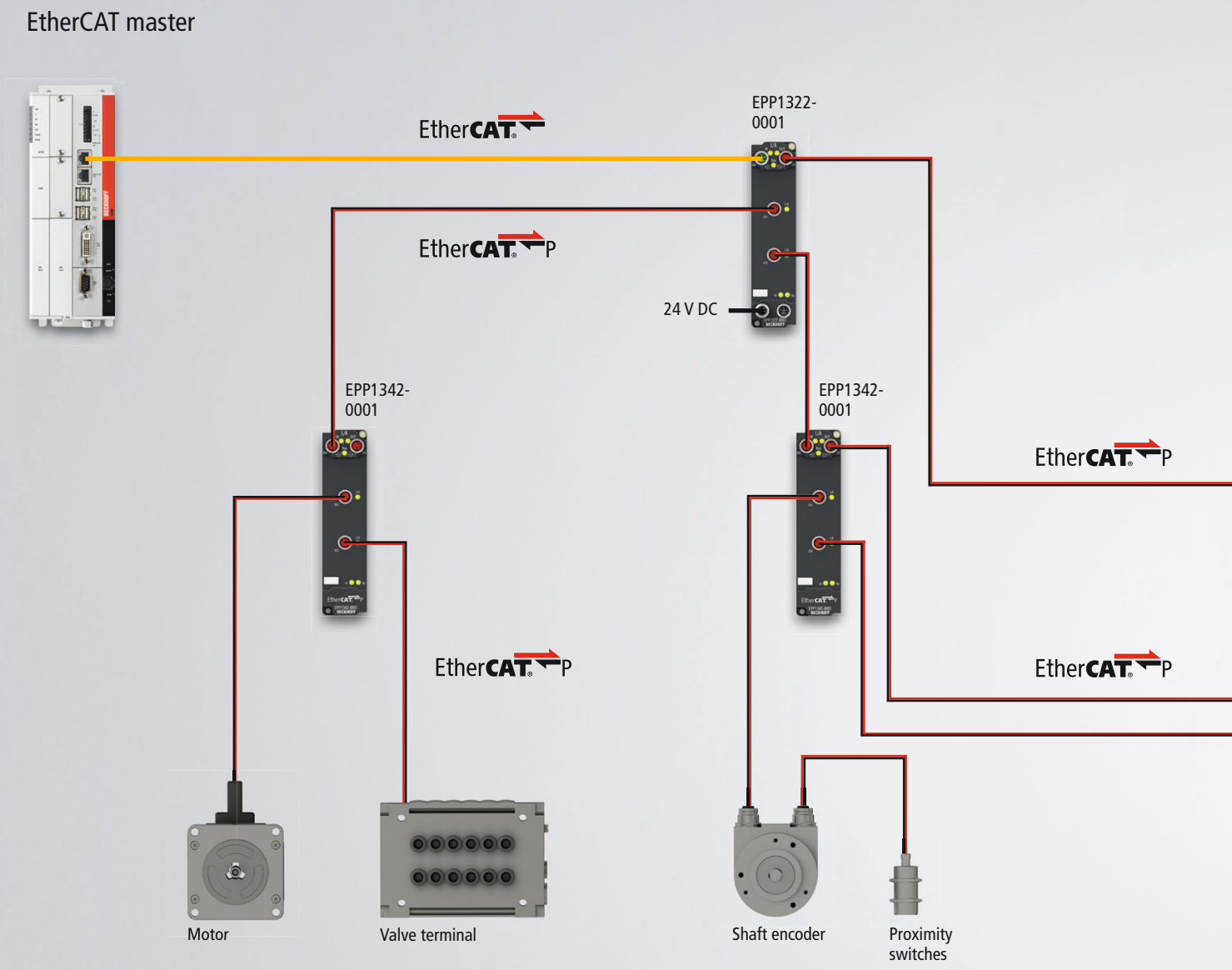

EtherCAT P for actuators
- AC and DC motors
- actuators
- valve terminals

EtherCAT P for sensors
- proximity switches
- light barriers
- shaft encoders

- optimized for direct connection of EtherCAT P devices in the field
- time savings through lower wiring effort
- fewer errors
- smaller sensors and actuators through the elimination of separate supply cables
- simple connection of components

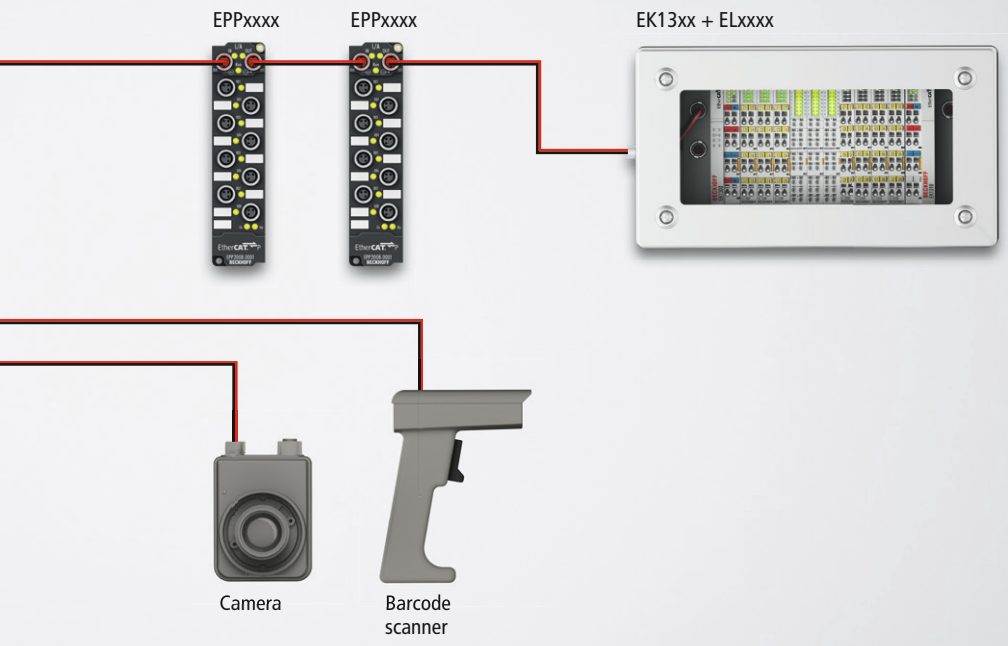

EtherCAT P for vision
- cameras
- barcode scanners
- 3D scanners

EtherCAT P for I/O
- connections in IP 67
- connections in IP 20

EtherCAT P: system overview for IP 20 and IP 67

As usual with EtherCAT, users benefit from the choice of topology and can combine line, star and tree structures with one another in order to achieve the least expensive and best possible layout of their system. Unlike classic Power over Ethernet (PoE), devices can be cascaded in EtherCAT P and supplied with power from one power supply unit.

The EK13xx EtherCAT P Couplers with IP 20 rating enable the use of EtherCAT P from the control cabinet right to the machine:

- EK1300 coupler with a second M8 socket, P-coded, for continuation of the topology
- 2-port EK1322 EtherCAT P junction (with feed-in) enables configuration of EtherCAT P star topologies.
- 1-port EK1310 EtherCAT P extension (with feed-in) enables conversion from EtherCAT to EtherCAT P.

The EPPxxxx EtherCAT P Box modules in protection class IP 67 cover the typical range of requirements for I/O signals: digital inputs (3.0 ms or 10 µs filter), digital outputs with 0.5 A output current, combination modules with digital inputs and outputs, analog inputs and outputs with 16-bit resolution, thermocouple and RTD

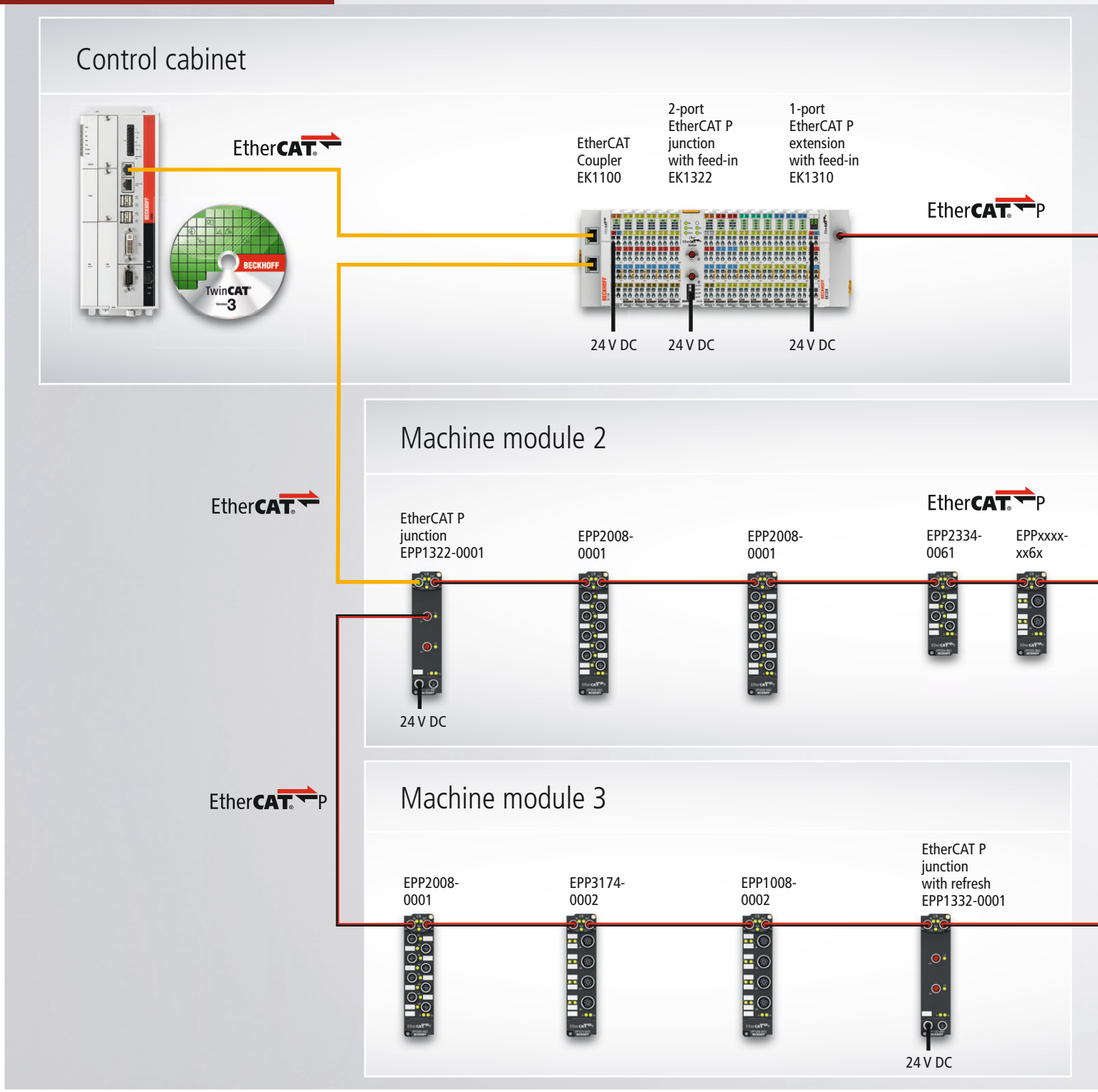

inputs. The EPP13xx EtherCAT P junctions are available for flexible topology configurations. The current carrying capacity of 3 A per EtherCAT P segment already enables the use of a wide range of sensors and actuators. If a power supply boost is required, the EPP1332-0001 EtherCAT P junction can be used to feed in both U_S and U_P at any point. The EPP1342-0001 can be used for branches without voltage refresh.

- free choice of topology in IP 20 and IP 67
- compact design of the EPPxxxx modules in IP 67
- numerous module variants for different signal types
- sensor/actuator supply directly via EtherCAT P

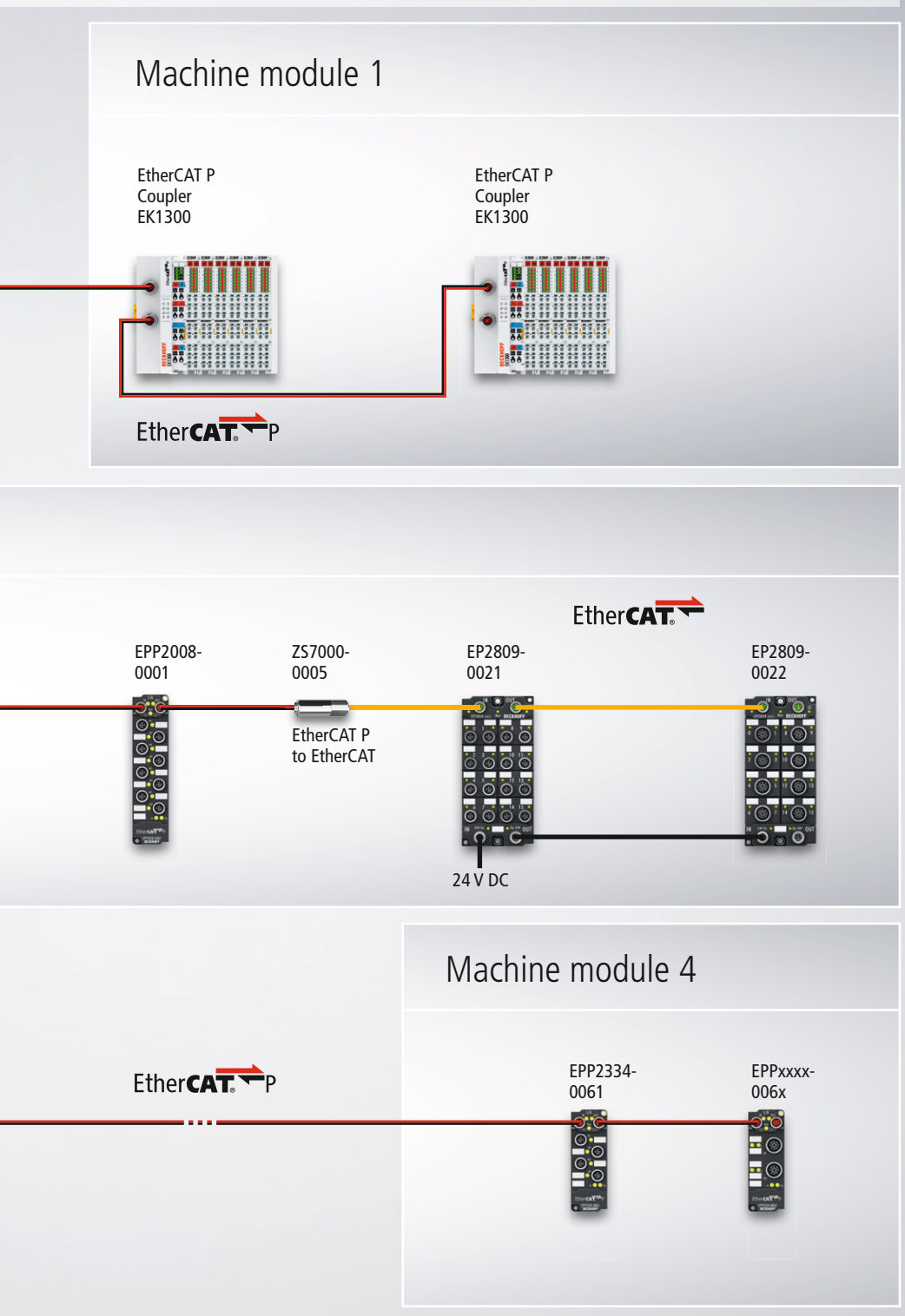

EtherCAT P: integration into ECP hybrid B12 to B40 connectors

- The trapezoidal EtherCAT P element enables high installation density, resulting in improved current-carrying capacity and dielectric strength of the power pins.
- seamless and consistent 360° shielding of the connector
- uniform EtherCAT P element for all sizes B12…B40

EtherCAT P: matching connectors for every performance class

- uniform construction across all sizes B12…B40
- bayonet connector for quick connect/ disconnect
- shielded and unshielded (outer shield) variants available
- large variety of pin and socket combinations
- mechanical keying (2…6 mechanical keying positions available, depending on size and pole number)
- visual marking through colored rings possible
- thinner cables by reducing the number of wires per cable
- connectors for field assembly
- Same design for all sizes simplifies installation.
- reduced assembly effort due to
  - pre-configuration of the cable
  - colored wires and matching identification in the connector
  - poka-yoke principle for the individual components
- flange socket with industry standard flange dimensions (front assembly, rear assembly and square flange)

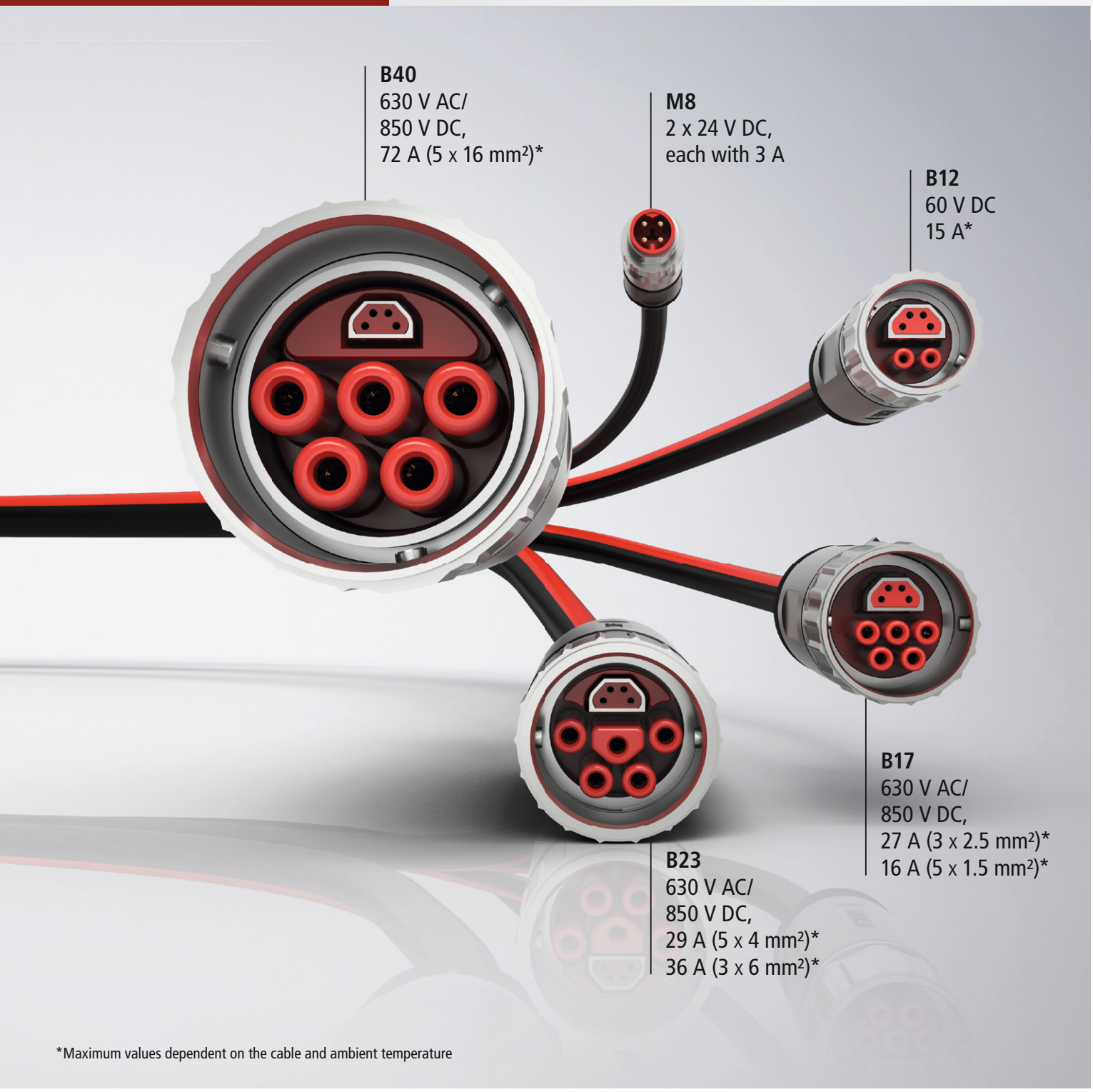

*Maximum values dependent on the cable and ambient temperature

One Cable Automation for the field level

Example: Robot
size B40, pole number 4 x EtherCAT P + 4 x power + PE, for max. 630 V AC with 72 A

Example: Control cabinet
size B23, pole number 4 x EtherCAT P + 4 x power + PE, for max. 400 V with 36 A

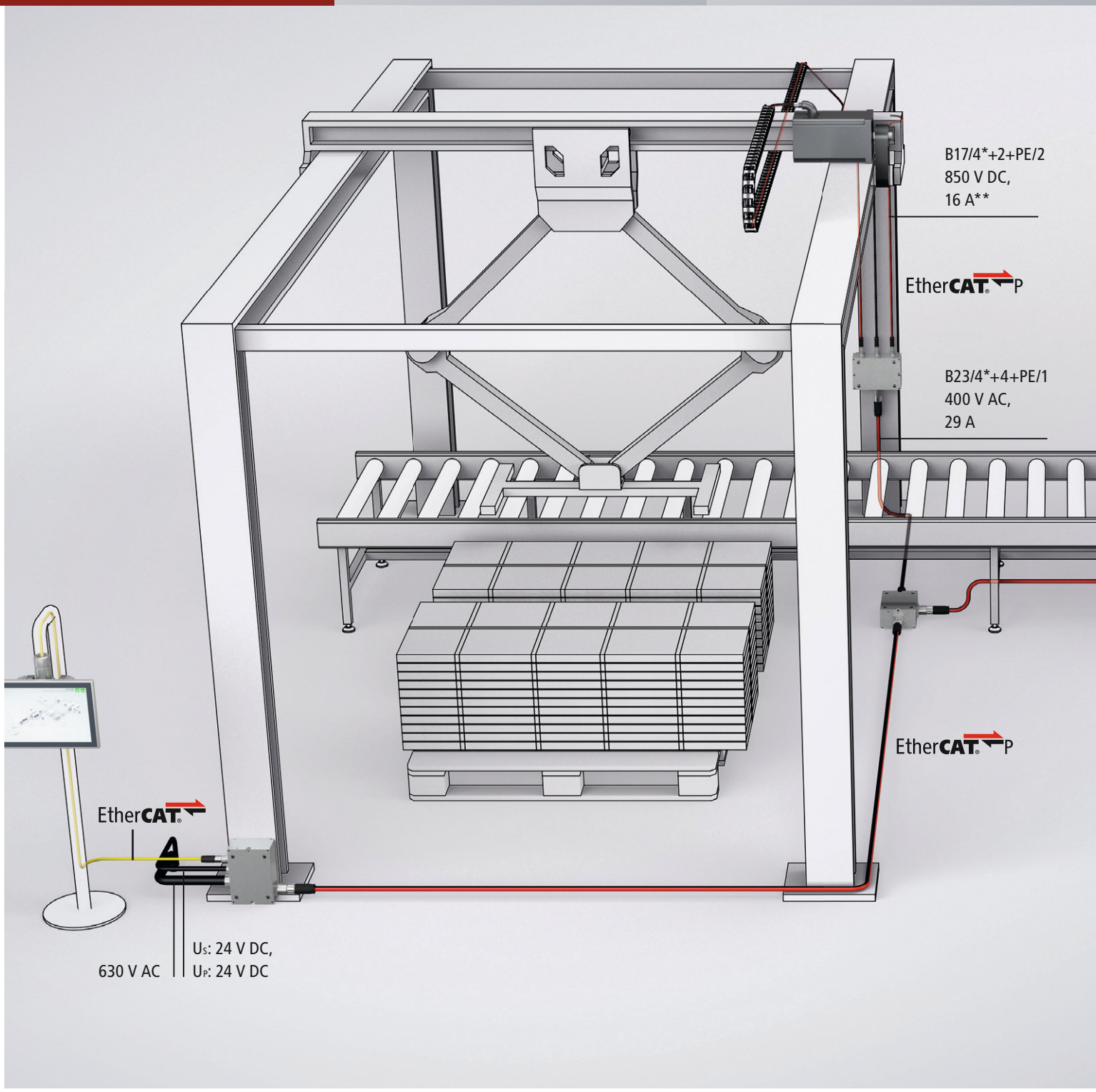

Example: Asynchronous motor with frequency converter
size B17, pole number 4 x EtherCAT P + 2 x power + PE, for max. 230 V AC with 27 A

Example: Stepper motor with controller
size B12, pole number 4 x EtherCAT P + 2 x power, for max. 48 V DC with 15 A

Example: Sensor
size M8, pole number 4 x EtherCAT P

- consistent connector system
- performance class with specification of the operating voltage and rated current
- size Bxx with specification of the EtherCAT P pins, power pins and keying

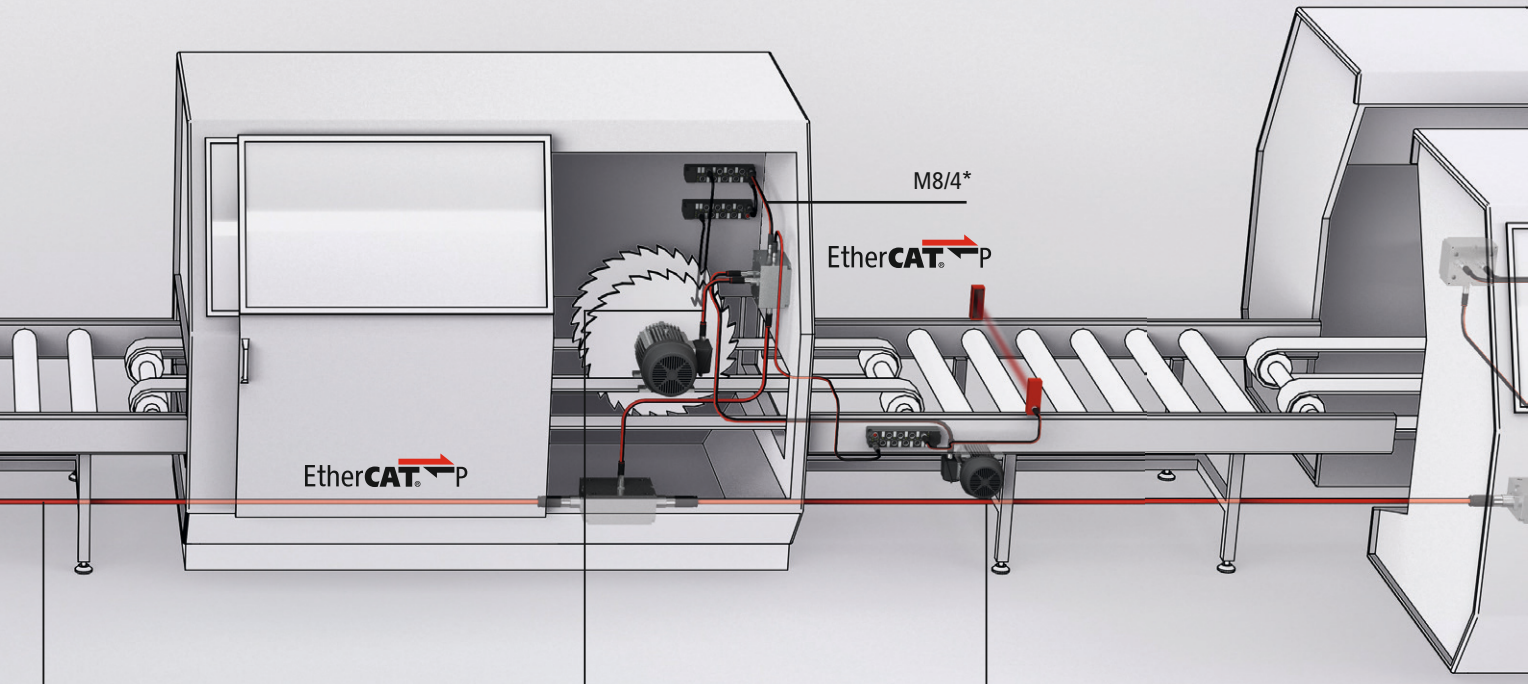

B40/4*+4+PE/1
630 V AC,
72 A**

B17/4*+4+PE/1
400 V AC,
16 A**

B17/4*+2+PE/1
230 V AC,
27 A**

ZK7www-xxxx-yzzz

- Length
- Cable type
- Connector type
- Connector family

*EtherCAT + 2 x 24 V DC/3 A (U_S, U_P)

**Maximum values dependent on the cable and ambient temperature

Highlights, advantages and technical data

- One Cable Connection: EtherCAT plus 2 x 24 V DC (U_S, U_P) on just 4 wires
- daisy-chained power supply through EtherCAT P devices
- reduced material and assembly costs
- plug family ideally scalable from 24 V to 850 V and 72 A
- lowered connection costs with outstanding EtherCAT performance
- flexible network topology of EtherCAT is retained
- eliminates separate supply cables
- reduction of error sources
- minimized wiring
- optimized space utilization
  - for drag-chains
  - in the control cabinet
  - in cable trays
  - on the machine
- smaller sensors and actuators due to:
  - elimination of the separate power supply
  - devices with a single M8 plug
  - very small connection footprint
- nominal voltages 2 x 24 V DC according to IEC 61131 (-15 %/+20 %), max. 3 A for U_S (system and sensor supply) and U_P (peripheral voltage for actuators)

- The value may fall below the lower limit of -15 %, if the application and the EtherCAT P slaves permit this.
- Incorrect connection is prevented due to the P-coded M8 plugs.
- no pure point-to-point connection, as in PoE, but cascadable in all topology variant tool-based system design, minimized material and system costs
- tool-based calculation of currents and voltages, resulting in optimum design and distribution of feed-in points
- based on two-pair standard Ethernet Cat.5 cable
- 100 Mbit/s full-duplex EtherCAT right into the sensor/actuator
- EtherCAT process data scalable from 1 bit to 64 kbyte per device
- up to 65,535 devices cascadable in a network
- cycle times < 100 µs
- distributed clocks for high-precision synchronization << 1 µs
- dynamic process data processing

One connector system for all applications

Contact versions

- different number of power pins per size
  - 2 (size B12)
  - 2 + PE (size B17)
  - 3 + PE (size B17)
  - 4 + PE (size B17…B40)
  - 5 + PE (size B23)

Sizes (Bxx)

- complete product family with different sizes: B12, B17, B23 and B40
- uniform EtherCAT P element for all sizes
- seamless and consistent 360° shielding

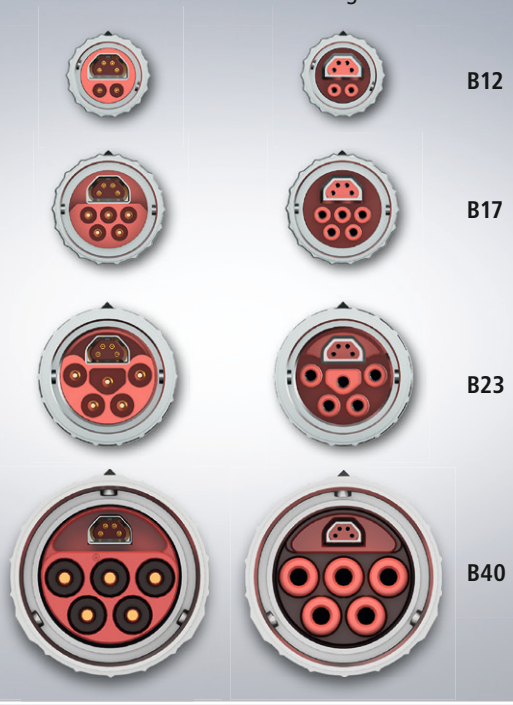

Industrial Ethernet/EtherCAT versions

- trapezoidal element inverse to EtherCAT P version
- protection against incorrect connection

Visual marking

- visual marking with colored rings possible
- exchangeable

Mechanical keying

- flexible and uniform mechanical keying across all sizes
- mechanical keying position (2 to 6 keying positions available, depending on size and number of poles)

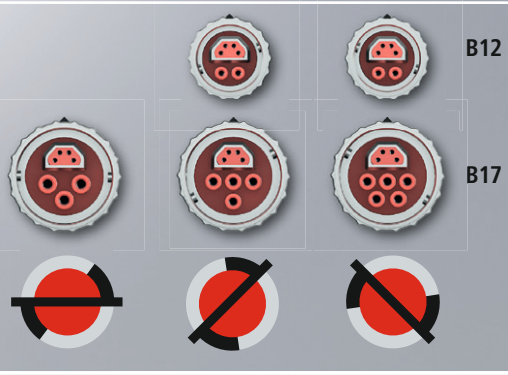

EtherCAT P cable for sizes B12, B17, B23 and B40

- cable configuration:
  - 2 x 0.75 mm² + (1 x 4 x AWG22)
  - 3 G 1.5 mm² + (1 x 4 x AWG22)
  - 5 G 1.5 mm² + (1 x 4 x AWG22)
  - 3 G 2.5 mm² + (1 x 4 x AGW22)
  - 4 x 1.5 mm² + (1 x 4 x AGW22)
  - 5 G 4 mm² + (1 x 4 x AGW22)
  - 3 G 2.5 + 2 x 1.5 mm² +(1 x 4 x AGW22)
  - 4 G 4 + 2 x 2.5 mm² + (1 x 4 x AGW22)
  - 5 G 16 mm² + (1 x 4 x AGW22)
- reduced bending radius for one-time fixed installation 4 x outer diameter
- drag-chain suitable
- fully shielded versions possible
- less filling material, simplified handling during field assembly of connectors

Connectors for field assembly

- simplified installation based on the poka-yoke principle
- simple and safe assembly at the machine:
  - Cables can be connected without wiring plan.
  - Cables can be prepared and assembled without having to attach connector parts.

B12

B17

EtherCAT P cable for size M8

- cable configuration (1 x 4 x AWG22) and (1 x 4 x AWG24)
- reduced cable diameter for AWG24 cables
- reduced bending radius for one-time fixed installation 4.5 x outer diameter
- drag-chain suitable

Vertical flange

- flange socket with standard flange dimensions
  - front assembly
  - rear assembly
  - square flange
- angled versions
- PCB assembly

Product overview sizes M8 to B40

M8
2 x 24 V DC,
each with 3 A

B12
60 V DC,
15 A*

Technical data	M8 P-coded	B12 2+4 pins	B17 2+PE+4 pins	B17 2+PE+4 pins
Rated voltage	50 V AC/60 V DC	50 V AC/60 V DC	250 V AC/DC	630 V AC/850 V DC
Rated current at 40 °C	3 A	15 A	24 A	17 A
Rated impulse voltage	0.8 kV	1.5 kV	1.5 kV	6 kV
Number of power pins	-	2	2 + PE (3)	2 + PE (3)
Number of EtherCAT P pins	4	4	4	4
Max. connection cross-section power	-	0.75 mm²	2.5 mm²	1.5 mm²
Max. connection cross-section data	0.34 mm² (AWG22)	0.34 mm² (AWG22)	0.34 mm² (AWG22)	0.34 mm² (AWG22)
Number of mechanical coding	1	2	3	3
Coding specification	1 = U_S 24 V DC/U_P 24 V DC	1 = 24 V DC 2 = user-defined voltage I	1 = 24 V DC + PE 2 = 230 V AC 3 = user-defined voltage I	1 = 24 V DC + PE 2 = 230 V AC 3 = user-defined voltage I
Way of locking	screw type	bayonet	bayonet	bayonet
Mating cycles	≥ 100	≥ 100	≥ 100	≥ 100
Protection class	IP 65/IP 67	IP 65/IP 67	IP 65/IP 67	IP 65/IP 67
Operating temperature	-30…+80 °C	-30…+80 °C	-30…+80 °C	-30…+80 °C
Body material	TPU, UL 94 HB, black	TPU, UL 94 HB, black	TPU, UL 94 HB, black	TPU, UL 94 HB, black
Contact material	copper alloy, nickel-gold galvanized	copper alloy, nickel-gold galvanized	copper alloy, nickel-gold galvanized	copper alloy, nickel-gold galvanized

B17
630 V AC/
850 V DC, 27 A*

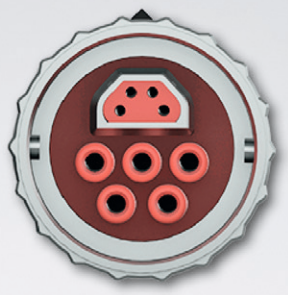

B23
630 V AC/
850 V DC, 36 A

B40
630 V AC/
850 V DC, 72 A*

B17 4+4 pins	B17 4+PE+4 pins	B23 4+PE+4 pins	B23 5+PE+4 pins	B40 4+PE+4 pins
630 V AC/850 V DC	630 V AC/850 V DC	630 V AC/850 V DC	630 V AC/850 V DC	630 V AC/850 V DC
16 A	16 A	29 A	25 A	72 A
1 kV	6 kV	6 kV	6 kV	6 kV
4	4 + PE (5)	4 + PE (5)	4 + PE + 2 (6)	4 + PE (5)
4	4	4	4	4
1.5 mm²	1.5 mm²	4 mm²	4 mm² + 2.5 mm²	16 mm²
0.34 mm² (AWG22)	0.34 mm² (AWG22)	0.34 mm² (AWG22)	0.34 mm² (AWG22)	0.34 mm² (AWG22)
3	3	3	3	6
1 = 2 x 24 V DC 2 = user-defined voltage I	1 = 2 x 24 V DC + PE 2 = 400 V AC 3 = user-defined voltage I	1 = 2 x 24 V DC + PE 2 = 400 V AC 3 = user-defined voltage I	1 = user-defined voltage I 2 = user-defined voltage II 3 = user-defined voltage III	1 = 2 x 24 V DC + PE 2 = 400 V AC 3 = user-defined voltage I 4 = user-defined voltage II 5 = user-defined voltage III 6 = user-defined voltage IV
bayonet	bayonet	bayonet	bayonet	bayonet
≥ 100	≥ 100	≥ 100	≥ 100	≥ 100
IP 65/IP 67	IP 65/IP 67	IP 65/IP 67	IP 65/IP 67	IP 65/IP 67
-30…+80 °C	-30…+80 °C	-30…+80 °C	-30…+80 °C	-30…+80 °C
TPU, UL 94 HB, black	TPU, UL 94 HB, black	TPU, UL 94 HB, black	TPU, UL 94 HB, black	TPU, UL 94 HB, black
copper alloy, nickel-gold galvanized	copper alloy, nickel-gold galvanized	copper alloy, nickel-gold galvanized	copper alloy, nickel-gold galvanized	copper alloy, nickel-gold galvanized

* Maximum values dependent on the cable and ambient temperature

EtherCAT P products in IP 20

The EK13xx EtherCAT P Couplers with IP 20 rating enable the use of EtherCAT P from the control cabinet right to the machine.

EK1300 | EtherCAT P Coupler
The EK1300 coupler integrates EtherCAT Terminals (ELxxxx) into the EtherCAT P network. The upper EtherCAT P interface is used to connect the coupler to the network, the lower P-coded M8 socket is used for optional continuation of the EtherCAT P topology. Since EtherCAT P integrates the power supply and the communication on a single line, an additional power supply for the coupler via the terminal points is no longer required. Depending on the application, the system and sensor supply U_S or the peripheral voltage for actuators U_P can be bridged to the power contacts. In addition to the run LED and the link and activity status, status LEDs indicate the state of the U_S and U_P voltages, as well as overload and short-circuit events.

EK1322 | 2-port EtherCAT P junction with feed-in
The 2-port EK1322 EtherCAT P junction enables configuration of EtherCAT P star topologies. The ports can be used to connect individual EtherCAT P devices or entire EtherCAT P strands.

The EK1322 can be installed at any point in an EtherCAT strand between the EtherCAT Terminals (ELxxxx). The front terminal points are used for the system and sensor supply U_S and the peripheral voltage for actuators U_P for the EtherCAT P outputs. In addition to the run LED and the link and activity status of the respective port, two status LEDs indicate the state of the U_S and U_P voltages, as well as overload and short-circuit events.

EK1310 | 1-port EtherCAT P extension with feed-in

The EK1310 EtherCAT P feed-in unit enables conversion from EtherCAT to EtherCAT P or the extension of an EtherCAT P network. Terminal points are used to supply the U_S (system and sensor supply) and the U_P (peripheral voltage for actuators) for the EtherCAT P circuit. In addition to the run LED and the link and activity status, status LEDs indicate the state of the U_S and U_P voltages, as well as overload and short-circuit events.

Technical data	EK1300	EK1322	EK1310
Task within EtherCAT system	coupling of EtherCAT Terminals (ELxxxx) to 100BASE-TX EtherCAT P networks	coupling of EtherCAT P junctions	conversion of the E-bus signals to 100BASE-TX Ethernet for extension of the EtherCAT P network
Data transfer medium	EtherCAT P cable, shielded, to 100BASE-TX EtherCAT P networks		
Bus interface	2 x M8 socket, shielded, screw type, P-coded	2 x M8 socket, shielded, screw type, P-coded	1 x M8 socket, shielded, screw type, P-coded
Power supply	from EtherCAT P (24 V DC for U_S and U_P)	external supply: 24 V DC for U_S and U_P	external supply: 24 V DC for U_S and U_P
Total current	from EtherCAT P, max. 3 A per U_S and U_P	max. 3 A per U_S and U_P	max. 3 A per U_S and U_P
Current consumption from U_S	40 mA + (∑ E-bus current/4)	typ. 3 mA	typ. 3 mA
Current consumption from U_P	typ. 4 mA	typ. 3 mA	typ. 3 mA
Current rating per port	max. 3 A per U_S and U_P	max. 3 A per U_S and U_P	max. 3 A per U_S and U_P
Current consumption E-bus	–	typ. 200 mA	typ. 110 mA
Operating/storage temperature	0…+55 °C/-25…+85 °C		
Approvals	CE, UL		
Protect. class/installation pos.	IP 20/variable		
Further information	www.beckhoff.com/EK1300	www.beckhoff.com/EK1322	www.beckhoff.com/EK1310

EtherCAT P products in IP 67

The EPPxxxx EtherCAT P Box system offers significant savings opportunities in automation technology. The combination of communication and power through the integration of U_S (system and sensor supply) and U_P (peripheral voltage for actuators) in the EtherCAT line results in even more freedom in terms of system design:

- No power cable is required, only the EtherCAT P line has to be laid.
- Material and labor time are saved, while valuable space is gained in drag-chains.
- The system wiring becomes more transparent, while offering more flexibility.

All the unique EtherCAT properties are included: outstanding performance, customizable topology and simple configuration. From a control perspective, the EtherCAT P Box modules behave exactly like the EtherCAT Box modules (EPxxxx). The communication can easily switch between EtherCAT and EtherCAT P, as required, as long as the input or output requirements of U_S and U_P are observed. The tried and tested design of the modules, which are made of robust plastic and are fully sealed, enables them to be used directly on the machine, even in wet, dirty or dusty conditions. Control cabinets, terminal boxes and power leads are no longer required.

Visually, the only differences between the EPP modules with otherwise identical dimensions and the EP modules are the red P-coded M8 sockets and the lack of a separate power supply feed. Pre-assembled cables simplify the EtherCAT P and signal wiring significantly. Very few wiring errors are possible, so commissioning is optimized. In addition to pre-assembled red/black EtherCAT P and standard sensor cables, field-configurable connectors and cable materials are available for maximum flexibility. Depending on the application, the sensors and actuators are connected via M8 or M12 screw-type connectors or D-sub connectors, just like for the standard EtherCAT Box.

The EtherCAT P Box modules cover the typical range of requirements for IP 67 I/O signals: digital inputs with different filters (3.0 ms or 10 µs), digital outputs with 0.5 A output current, combination modules with digital inputs and outputs, analog inputs and outputs with 16-bit resolution, as well as thermocouple and RTD inputs. In addition, various EtherCAT P Box modules are available for system tasks such as encoder inputs or serial interfaces.

▶ **www.beckhoff.com/EPPxxxx**

+60 °C
-25 °C

The EtherCAT P Box modules offer an extended temperature range of -25 to +60 °C (storage temperature -40 to +85 °C).

EtherCAT P feed-in junction box modules

The 2-port EtherCAT P junction EP1312-0001 enables configuration of EtherCAT P topologies from an EtherCAT system. A modular EtherCAT P star can be realized by using several EP1312 in series. Individual devices or complete EtherCAT P strands can be connected at the junction ports.

The 1-channel EtherCAT to EtherCAT P supply module EPP1321-0060 in IP 67 enables the flexible conversion from EtherCAT to EtherCAT P. For larger or more branched machines or systems, a power supply boost may be required.

The EPP1322-0001 EtherCAT P junction with refresh feature can be used for feeding in U_S or U_P at any point in the system.

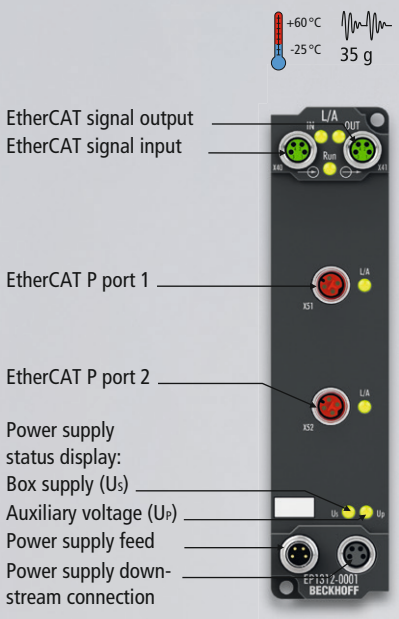

EP1312-0001

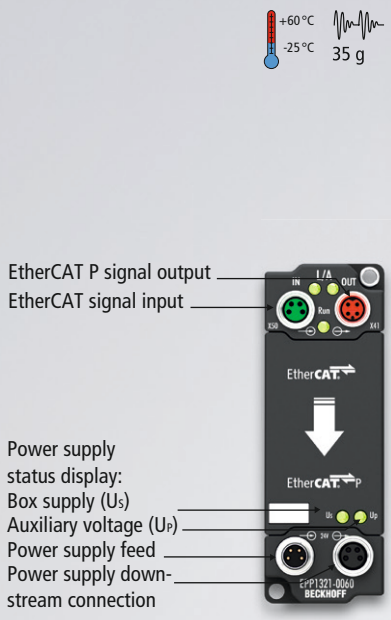

EPP1321-0060

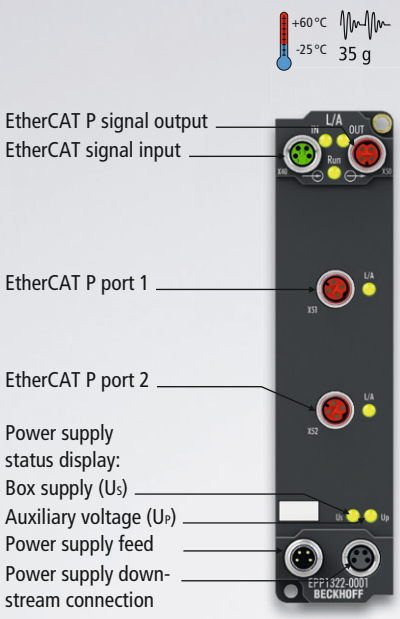

EPP1322-0001

Technical data	EP1312-0001	EPP1321-0060	EPP1322-0001
Task within EtherCAT system	coupling of EtherCAT P junctions	converter from EtherCAT to EtherCAT P	coupling to the EtherCAT network, EtherCAT P junction and feed-in of U_S and U_P
Number of channels	IN: 1 x EtherCAT, OUT: 1 x EtherCAT, 2 x EtherCAT P	IN: 1 x EtherCAT, OUT: 1 x EtherCAT P	IN: 1 x EtherCAT, OUT: 3 x EtherCAT P
Bus interface	2 x M8 socket, shielded, screw type, 2 x P-coded M8 socket, screw type	M8-socket, shielded, screw type, P-coded	2 x M8-socket, shielded, screw type, P-coded
Nominal voltage	24 V DC (-15 %/+20 %)	24 V DC (-15 %/+20 %)	24 V DC (-15 %/+20 %)
Total current	feed-in max. 3 A per U_S and U_P	feed-in max. 3 A per U_S and U_P	feed-in max. 4 A per U_S and U_P
Current consumption from U_S	typ. 120 mA	typ. 100 mA.	typ. 120 mA + current of the EtherCAT P ports
Current rating per port	max. 3 A per U_S and U_P	max. 3 A per U_S and U_P	max. 3 A per U_S and U_P
Power supply connection	feed: 1 x M8 male socket, 4-pin; downstream connection: 1 x M8 female socket, 4-pin	feed: 1 x M8 male socket, 4-pin; downstream connection: 1 x M8-socket, 4-pin	feed: 1 x M8 male socket, 4-pin; downstream connection: 1 x M8-socket, 4-pin
Operating/storage temperature	-25…+60 °C/-40…+85 °C	-25…+60 °C/-40…+85 °C	-25…+60 °C/-40…+85 °C
Vibration/shock resistance	conforms to EN 60068-2-6/ EN 60068-2-27	conforms to EN 60068-2-6/ EN 60068-2-27	conforms to 60068-2-6/ EN 60068-2-27
EMC immunity/emission	conforms to EN 61000-6-2/ EN 61000-6-4	conforms to EN 61000-6-2/ EN 61000-6-4	conforms to EN 61000-6-2/ EN 61000-6-4
Protect. class/installation pos.	IP 65/66/67 (conforms to EN 60529)/variable	IP 65/66/67 (conforms to EN 60529)/variable	IP 65/66/67 (conforms to EN 60529)/variable
Approvals	CE	CE, UL in preparation	CE, UL
Further information	www.beckhoff.com/EP1312	www.beckhoff.com/EPP1321-0060	www.beckhoff.com/EPP1322

B17 EtherCAT P feed-in junction box

The EP9224-0037 enables power distribution from a B17 ENP input to four EtherCAT P ports with B17 ENP forwarding. In each EtherCAT P junction, the current consumption for the control voltage U_S and the peripheral voltage U_P is monitored, limited, and if necessary, switched off. The input voltage and current values of all outputs can be evaluated via the process data.
A 5-pin B17 ENP connector is used for communication with the box and for supply of power up to 14 A (per U_S/U_P). Several modules can be configured in a cascade arrangement through power forwarding. In case of a short circuit on one of the four outputs or eight voltages (4 x U_S/4 x U_P), that voltage is switched off. The supply for the other junctions remains active. The switch-off or voltage regulation is carried out in such a way that the input voltage does not drop below a critical value. A continuous log of the relevant data can be retrieved in the event of an error. During start-up consumers with large capacities can be added without problem.

The diagnostic messages of the individual channels can be read by the master via the EtherCAT interface. Independent switching of individual consumer branches is also possible via the EtherCAT master.

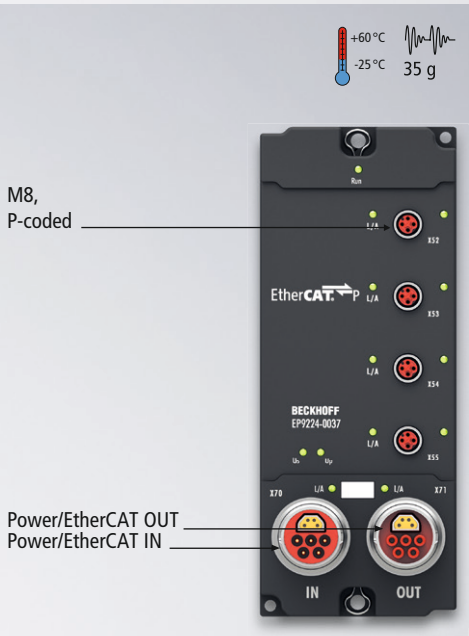

EP9224-0037

Technical data	EP9224-0037
Task within EtherCAT system	coupling to the EtherCAT network, EtherCAT P junction, feed in and monitoring of U_S and U_P
Number of channels	IN: 1 x ENP OUT: 1 x ENP, 4 x EtherCAT P
Current rating per port	max. 3 A per U_S and U_P (M8 P-coded)
Protocol	EtherCAT
Data-Logging	recording of relevant data in case of failure
Special features	input voltages/currents, output currents via process data
Operating/storage temperature	-25…+60 °C/-40…+85 °C
Vibration/shock resistance	conforms to EN 60068-2-6/EN 60068-2-27
EMC immunity/emission	conforms to EN 61000-6-2/EN 61000-6-4
Approvals	CE, UL in preparation
Further information	www.beckhoff.com/EP9224-0037

EtherCAT P to EtherCAT converter

The EPP9001-0060 EtherCAT P Box converts the incoming EtherCAT P signal (red M8 socket, P-coded) into an EtherCAT signal (green M8 socket). In addition, the voltage output from the U_S and U_P voltages can be found on the EtherCAT P Box (black M8 socket). The EPP9001-0060 is an active EtherCAT device, meaning it appears in the EtherCAT process image of the EtherCAT master, e.g. TwinCAT.

The EtherCAT P Box modules are characterized by their small and space-saving form factor.

Optionally the passive cable adapter ZS7000-0005 can be used for EtherCAT P to EtherCAT conversion.

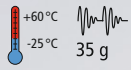

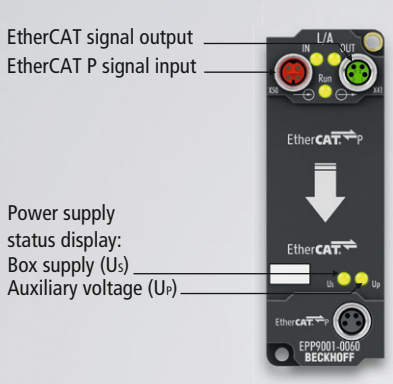

EPP9001-0060

ZS7000-0005

Technical data	EPP9001-0060	ZS7000-0005
Task within EtherCAT system	converter from EtherCAT P to EtherCAT + power	converter from EtherCAT P to EtherCAT
Number of channels	IN: 1 x EtherCAT P, OUT: 1 x EtherCAT	IN: 1 x EtherCAT P, OUT: 1 x EtherCAT
Bus interface	1 x M8 socket, shielded, screw type, P-coded, 1 x M8 socket, shielded, screw type	1 x M8 socket, shielded, screw type, P-coded, 1 x M8 socket, shielded, screw type
Nominal voltage	24 V DC (-15 %/+20 %)	-
Total current	feed-in max. 3 A per U_S and U_P	-
Current consumption from U_S	typ. 100 mA	-
Current rating per port	max. 3 A per U_S and U_P	-
Power supply connection	downstream connection: 1 x M8 socket, 4-pin	-
Operating/storage temperature	-25…+60 °C/-40…+85 °C	-25…+60 °C/-40…+85 °C
Vibration/shock resistance	conforms to EN 60068-2-6/EN 60068-2-27	conforms to EN 60068-2-6/EN 60068-2-27
EMC immunity/emission	conforms to EN 61000-6-2/EN 61000-6-4	conforms to EN 61000-6-2/EN 61000-6-4
Protect. class/installation pos.	IP 65/66/67 (conforms to EN 60529)/variable	IP 65/66/67 (conforms to EN 60529)/variable
Approvals	CE, UL	CE
Further information	www.beckhoff.com/EPP9001-0060	www.beckhoff.com/ZS7000-0005

EtherCAT P Box with diagnostics

The EPP9022-0060 EtherCAT P Box can be used for diagnosing and measuring the voltages U_S and U_P and currents I_S and I_P, both temporarily during commissioning and permanently during operation. Even without an EtherCAT master, the voltage range is displayed on the box by LEDs (green, yellow and red). In a running EtherCAT network, the values of U_S ,U_P I_S and I_P can also be read out as process data in the master. The voltage levels for the LED displays can be adjusted by CoE.

In addition, the EtherCAT P Box is equipped with an M8 power socket to which an external multimeter can be connected for measuring the voltages.

The EPP9022-9060 EtherCAT P Box also contains Beckhoff TwinSAFE SC technology, which enables the use of standard signals for safety-related tasks in any network or fieldbus.

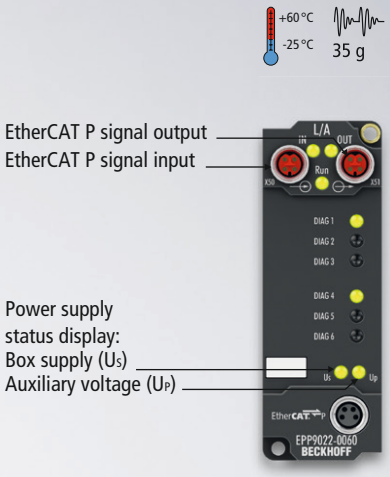

EPP9022-0060

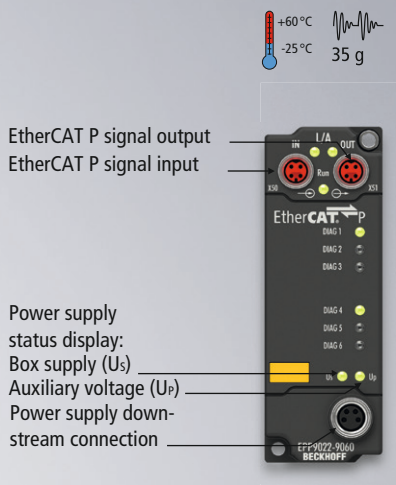

EPP9022-9060

Technical data	EPP9022-0060	EPP9022-9060
Task within EtherCAT system	diagnostics of the U_S/U_P voltages and I_S/I_P currents	diagnostics of the U_S/U_P voltages and I_S/I_P currents
Number of channels	IN: 1 x EtherCAT P OUT: 1 x EtherCAT P	IN: 1 x EtherCAT P OUT: 1 x EtherCAT P
Bus interface	M8 socket, shielded, screw type, P-coded,	M8 socket, shielded, screw type, P-coded,
Nominal voltage	24 V DC (-15 %/+20 %)	24 V DC (-15 %/+20 %)
Total current	feed-in max. 3 A per U_S and U_P	feed-in max. 3 A per U_S and U_P
Current consumption from U_S	typ. 100 mA	typ. 100 mA
Current rating per port	max. 3 A per U_S and U_P	max. 3 A per U_S and U_P
Power supply connection	not necessary	not necessary
Special features	diagnostic LED for U_S, diagnostic LED for U_P	diagnostic LED for U_S, diagnostic LED for U_P, TwinSAFE SC
Operating/storage temperature	-25…+60 °C/-40…+85 °C	-25…+60 °C/-40…+85 °C
Vibration/shock resistance	conforms to EN 60068-2-6/EN 60068-2-27	conforms to EN 60068-2-6/EN 60068-2-27
EMC immunity/emission	conforms to EN 61000-6-2/EN 61000-6-4	conforms to EN 61000-6-2/EN 61000-6-4
Protect. class/installation pos.	IP 65/66/67 (conforms to EN 60529)/variable	IP 65/66/67 (conforms to EN 60529)/variable
Approvals	CE, UL	CE, UL
Further information	www.beckhoff.com/EPP9022-0060	www.beckhoff.com/EPP9022-9060

EtherCAT P: the right accessories for every performance class

The EtherCAT P component accessories include pre-assembled cables, cables sold by the meter and field-assembled connectors. The performance classes range from a simple 24 V sensor with P-coded M8 to the connection of a robot with a power consumption of up to 72 A with a B40 hybrid connector. As single-cable solutions for high currents and voltages, the ECP and ENP hybrid cables enable savings potential with maximum flexibility in machine design.

▶ www.beckhoff.com/io-accessories

EtherCAT P cables

ECP and ENP hybrid cables

Hybrid connector accessories

DK3282-1119

One Cable Automation for the field level:
EtherCAT P. See all information at
▸ **www.beckhoff.com/EtherCATP**

Beckhoff Automation GmbH & Co. KG
Huelshorstweg 20
33415 Verl
Germany
Phone: + 49 5246 963-0
info@beckhoff.com
www.beckhoff.com